2538
POWER LED 3W No HEATSINK
Parts No : KD-JP3W-P
Color : PINK

Item	Symbol	Value	Unit
DC Forward Current	**I_F**	**700ma**	**mA**
Pulse Forward Current	**I_{FP}**		**mA**
Reverse Voltage	**V_R**	**3.0-3.2V**	**V**
Power Dissipation	**P_D**		**mW**
Operating Temperature	**Topr**	**200**	**℃**
Storage Temperature	**Tstg**		**℃**
Lead Soldering Temperature	**Tsol**	**常温**	**—**

Item	Symbol	Condition	Min.	Typ.	Max.	Unit
DC Forward Voltage	**V_F**					
DC Reverse Current	**I_R**					
Domi. Wavelength	**λ_D**					
Luminous Flux	**Φ_V**	**150-160LM**				
Color Temperature	**CCT**					
50% Power Angle	**$2\theta_{1/2}$**					

■Outline Dimension

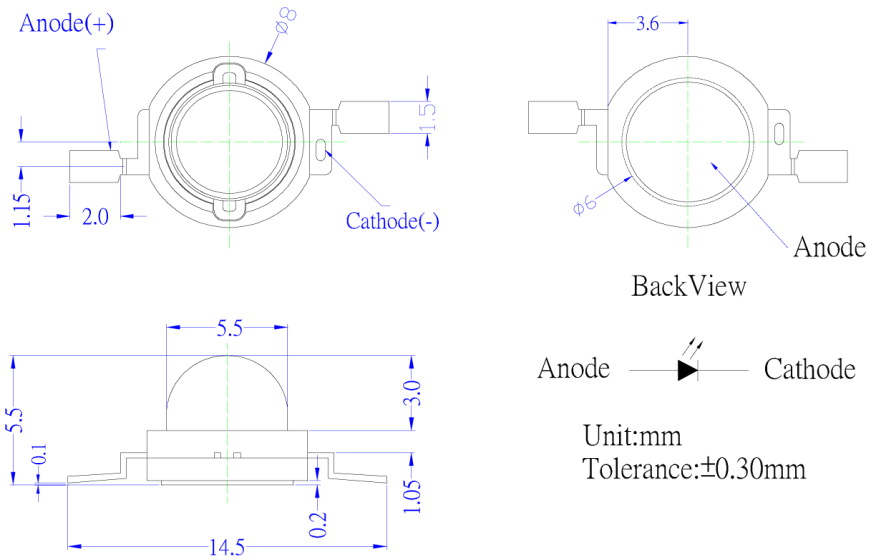

Kaitodenshi
http://kaitodenshi.jp/